APPLIANCES

REFRIGERATOR: "FRIGIDAIRE", 26 CU. FT., SIDE–BY–SIDE, WITH PURESOURCE 2 WATER FILTRATION, SEARS MODEL NO. 04634612000, MFR. MODEL NO. FRS26KF6EW, (31–3/4" D. X 35–5/8" W. X 69–3/8" H.)

FREEZER: (OPTIONAL – NOT SHOWN ON PLANS) "SEARS KENMORE", UPRIGHT, 16.7 CU. FT., SEARS MODEL NO. 04626732000, MFR. MODEL NO. 26732, (26–1/2" D. X 32" W. X 64–1/2" H.)

DISHWASHER: (OPTIONAL – NOT SHOWN ON PLANS) "BOSCH", 24" BUILT–IN, SEARS MODEL NO. 02217112000, BOSCH MODEL NO. SHE43M02UC
STOVE: "SEARS KENMORE", ELECTRIC, 30" FREESTANDING, MFR. MODEL NO. 02294352000, MFR. MODEL NO. 94352, (25–3/4" D. X 30" W.)

RANGE HOOD: "BOSCH", 30" PYRAMID UPDRAFT, 3–SPEED, 350 CFM, STAINLESS STEEL, SEARS MODEL NO. 02241753000, MFR. MODEL NO. DKE9305AUC, (19–5/8" D. X 30" W.)

COOKTOP (OPTIONAL, NO OVEN, INSTALLED IN COUNTERTOP): "WHIRLPOOL", ELECTRIC, 30", CERAMIC GLASS COOKING SURFACE, BLACK, SEARS MODEL NO. 02223919000, MFR. MODEL NO. RCC3024RB, (21" D. X 30" W.)

GARBAGE DISPOSAL: "SEARS KENMORE", 3/4 HP

WASHER: (OPTIONAL, NOT SHOWN ON PLANS) "SEARS KENMORE", ELITE HE3T, 4.0 CU FT. KING SIZE CAPACITY PLUS FRONT–LOAD, MFR. MODEL NO. 49972, (31–1/2" D. X 27" W.)

DRYER: (OPTIONAL, NOT SHOWN ON PLANS) "SEARS KENMORE", ELITE HE3, 7.0 CU FT. SUPER CAPACITY, ELECTRIC, MFR. MODEL NO. 87892, (31–1/2" D. X 27" W.)

SPECIFICATIONS

CONTRACTOR NOTES

SELECT MANUFACTURERS LISTED OR APPROVED (BY OWNER) EQUALS.

CONTRACTOR TO REVIEW ALL SUBMITTALS AND SHOP DRAWINGS FOR COMPLIANCE WITH THE DRAWINGS AND SPECIFICATIONS BEFORE ORDERING MATERIALS.

KITCHEN CABINETS & COUNTERTOPS:

COUNTERTOP = NO–DRIP FRONT
COVE MOULDLING
CURVED BACKSPLASH W/SCRIBE
GP–50 (HORIZONTAL SURFACES)

FACE STYLES & MATERIALS AS SELECTED BY OWNER
COLORS AS SELECTED BY OWNER.

EACH UPPER CABINET TO CONTAIN (2) ADJUSTABLE SHELVES. EACH BASE CABINET TO CONTAIN (1).

MEASURE EXIST. CONDITIONS BEFORE FABRICATING NEW CASEWORK. SCRIBE AS NECESSARY.

VERIFY DIMENSIONS OF NEW APPLIANCES BEFORE FABRICATING NEW CASEWORK.

KITCHEN APPLIANCES: SEE "APPLIANCES"

PLUMBING FIXTURES: PER OWNER

SHOWER STALLS: PER OWNER

GYPSUM WALLBOARD: (GWB)
5/8" TYPE "X" UNLESS OTHERWISE NOTED. WATER RESISTANT (WR) ON PLUMBING/WET WALLS IN BATHROOMS

INSULATION:
FIBERGLASS BATT, ASTM C 665, TYPE 1 (UNFACED), VAPOR BARRIER 6 MIL POLYETHYLENE, ASTM D 4397

APARTMENT ENTRY DOORS:
INSULATED METAL STYLE AS SELECTED BY OWNER. PAINT COLOR AS SELECTED BY OWNER.

INTERIOR DOORS:
SOLID CORE. SEE DOOR SCHEDULE.

DOOR HARDWARE:
OWNER TO DETERMINE LOCKSET FUNCTIONS.

ROOF DECKING: "TREX" DECKING ON 2X SLEEPERS, ALLOW FOR DRAINAGE.

VINYL WINDOWS:
"ALSIDE, SHEFFIELD", FUSION–WELDED, DOUBLE–HUNG, DOUBLE–GLAZED, ARGON FILLED, LOW–E, SAFETY GLAZING WHERE REQUIRED BY CODE, 1–800–778–2323, SEATTLE, WA. COLOR; WHITE, INTERIOR GRID "COLONIAL", WHITE. MEET OR EXCEED CODE EGRESS MINIMUMS. SEE WINDOW SCHEDULE ON SHT. A2.

CARPET & FLOOR BASE:
AS SELECTED BY OWNER.

VINYL TILE FLOOR FINISH & BASE:
"ARMSTRONG", "STANDARD EXCELON, IMPERIAL TEXTURE", 4" RUBBER BASE, COLOR & PATTERN AS SELECTED BY OWNER.

PAINT:

GWB = SEMI–GLOSS, 1 COAT LATEX PRIMER, 2 COATS LATEX FINISH, TEXTURE AS DETERMINED BY OWNER

PLYWD = FLAT, 1 COAT INTERIOR ALKYD ENAMEL UNDERCOAT, 1 COAT LATEX ENAMEL.

METAL = SEMI–GLOSS, 1 COAT RUST–INHIBITING PRIMER (IF REQUIRED), 2 COATS LATEX ENAMEL.

NOTE: ALL COLORS AS SELECTED BY OWNER.

FIRE EXTINGUISHERS:
"LARSEN'S MP2–1/2", 2.5 LBS., UL RATING 1A–10B:C, WALL MTD. STANDARD BRACKET #817. SEE PLANS FOR LOCATIONS.

MECHANICAL:
PROVIDE AND INSTALL GE ZONELINE PTAC 3500 SERIES COOLING WITH HEAT PUMP AND FREEZE SENTINEL WALL UNITS FOR HEAT AND AC IN EACH APARTEMENT. DESIGN–BUILD BY OWNER.

ELECTRICAL:
PROVIDE AND INSTALL HARDWIRED (WITH BATTERY BACKUP) SMOKE DETECTORS IN ALL BEDROOMS.

DESIGN/BUILD BY OWNER

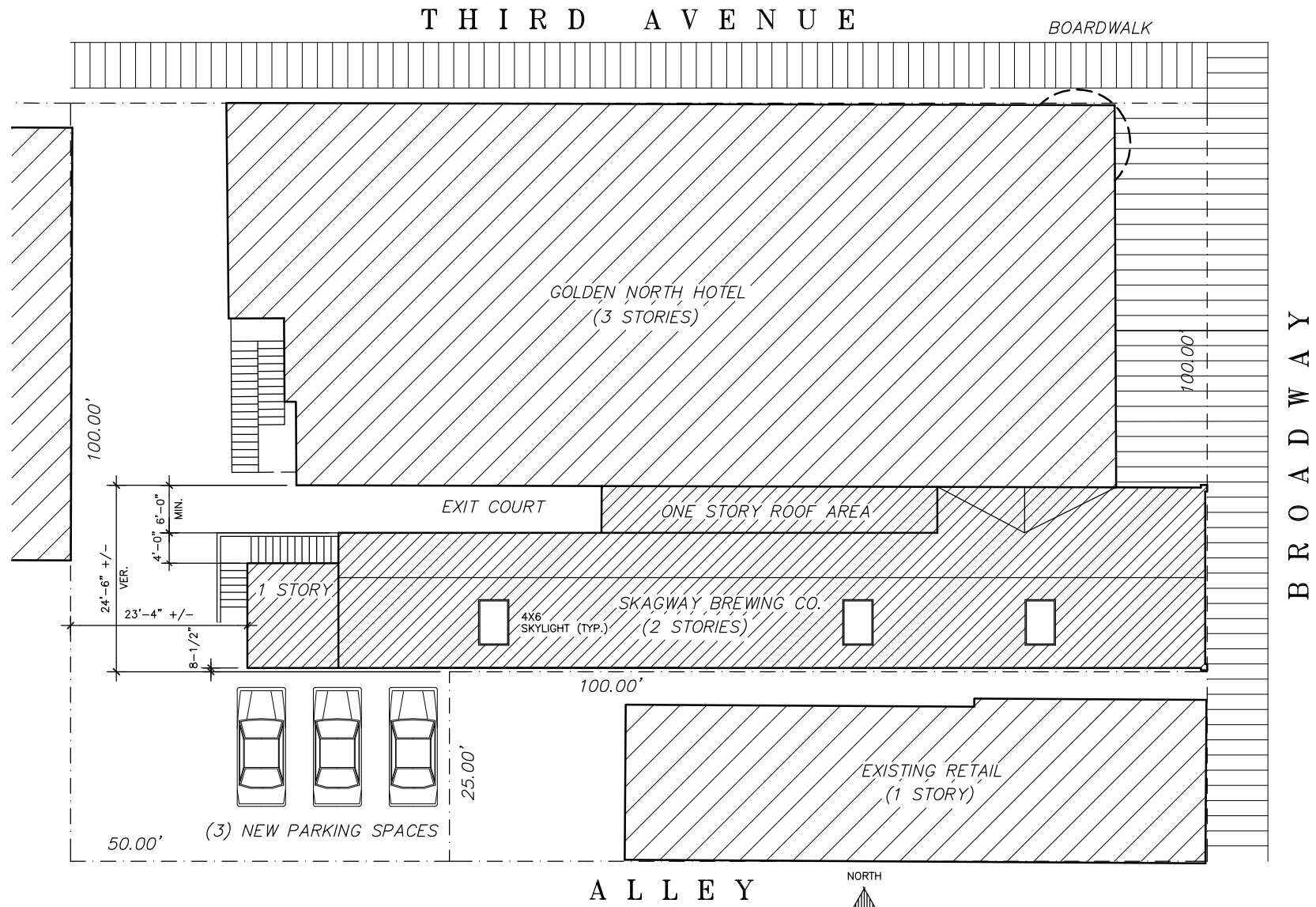

A SITE PLAN
SCALE: 1/8" = 1'–0" D:\CAD\0611

NORTH

IBC ARCHITECTURAL CODE REVIEW

CODE: INTERNATIONAL BUILDING CODE (IBC) 2003

OCCUPANCY (BREWING CO. BLDG.) (SEC. 302):
M (MERCANTILE), R–2 (APARTMENTS)

OCCUPANCY SEPARATIONS: (TABLE 302.3.2) (REDUCED PER TABLE 601.d)
M/R–2 = 1 HOUR (SEE DET. D/A3)

CONSTRUCTION TYPE: V–B (WOOD, NON–RATED) (TABLE 601)

AUTOMATIC SPRINKLER SYSTEM:
M = NOT REQUIRED (SEC. 903.2.6)
R–2 = NOT REQUIRED (SEE AK AMENDED SUBSEC. 903.2.7.2)

NOTE: SPRINKLER REQ'D. PER SKAGWAY MUNICIPAL CODE (>500 SF IN HISTORIC DISTRICT). BUILDING IS SPRINKLERED

FIRE RESIST. OF EXTERIOR WALLS: (TABLE 602) (TYPE V–B)
M = 2–HOURS 0 TO 5 FT. FROM PROPERTY LINE
R–2 = 1–HOUR 0 TO 5 FT. FROM PROPERTY LINE

EXTERIOR WALL OPENINGS (TABLE 704.8) (SPRINKLERED PER 704.8.1)
< 3 FEET: NOT PERMITTED
> 3 TO 5 FEET; UNPROTECTED = 15% OF EXT. WALL ALLOWABLE
> 5 TO 10 FEET; UNPROTECTED = 25% OF EXT. WALL ALLOWABLE

NOTE: NEW WINDOWS ALLOWED TO BE UNPROTECTED PER SEC. 1023.5.2 EXC. 1 (OCC. LOAD LESS THAN 10)

ALLOWABLE HEIGHT & STORIES: (V–B) (TABLE 503)
HEIGHT = 60 FEET (ACTUAL HEIGHT: 28'–0" FEET, VERIFY)
STORIES = M/2 STORY, R–1/2 STORIES, S–1/1 STORY

NOTE: MAX. HT. INCREASED BY 20 FT. (SEC. 504.2–SPRINKLERED)
NOTE: MAX. STORIES INCREASED TO 2 (SEC. 504.2–SPRINKLERED)

ALLOWABLE AREA PER FLOOR: (V–B) (TABLE 503)
M = 18,000 SF PER FLOOR
R–1 = 14,000 SF PER FLOOR
S–1 = 18,000 SF PER FLOOR

NOTE: MAX. AREA INCREASED BY 200% (SEC. 506.3–SPRINKLER)

GENERAL NOTES

ALL CONSTRUCTION TO BE PER 2003 IBC AND ALL APPLICABLE MECHANICAL, ELECTRICAL, FIRE CODES (AS AMENDED BY THE CITY OF SKAGWAY) AND THE SKAGWAY ZONING/LAND USE REQUIREMENTS. THE CONSTRUCTION WILL BE IN ACCORDANCE WITH THE ADAAG (AMERICANS WITH DISABILITIES ACT – ACCESSIBILITY GUIDELINES).

ALL INTERIOR NON–PLUMBING WALLS ARE TO BE 2X4 WOOD FRAMING, 5/8" GWB BOTH SIDES AND FILLED WITH FIBERGLASS BATT INSULATION UNLESS OTHERWISE NOTED. DIMENSIONS ARE TO FACE OF FRAMING MEMBER UNLESS OTHERWISE NOTED.

ALL PLUMBING WALLS ARE TO BE 2X6 WOOD FRAMING, 5/8" GWB BOTH SIDES (WR IF AT WET AREAS) AND FILLED WITH FIBERGLASS BATT INSULATION UNLESS OTHERWISE NOTED. DIMENSIONS ARE TO THE FACE OF FRAMING MEMBER UNLESS OTHERWISE NOTED.

CONTRACTOR TO VERIFY ALL EXISTING CONDITIONS AND DIMENSIONS BEFORE BEGINNING WORK AND TO NOTIFY THE OWNER'S REPRESENTATIVE AS TO ANY DISCREPANCIES.

DISPOSAL OF DEMOLITION MATERIAL (NOT BE BE SALVAGED) IS THE RESPONSIBILITY OF THE CONTRACTOR. BURNING AND DISPOSAL OF CONCRETE AND EXCAVATED MATERIAL WILL NOT BE ALLOWED ON THE PROJECT SITE.

REMOVE ALL ELECTRICAL OUTLETS, TELEPHONE JACKS, SWITCHES AND THERMOSTATS THAT ARE LOCATED IN INTERIOR WALLS TO BE REMOVED OR WALLS WHERE A CONFLICT WITH NEW WORK EXISTS. IF UTILITIES ARE NOT TO BE EXTENDED, CAP IN A SAFE MANNER IN ACCORDANCE WITH ACCEPTED INDUSTRY STANDARDS.

WHERE REMOVAL OF EXISTING CONDITIONS HAS OCCURRED, PATCH AS REQUIRED TO MATCH EXISTING ADJACENT SURFACES AND FINISHES.

THESE DRAWINGS ARE FOR USE ON THE GOLDEN NORTH ANNEX APARTMENT PROJECT ONLY. THEY ARE NOT TO BE REUSED IN WHOLE OR IN PART ON ANY OTHER PROJECT WITHOUT WRITTEN PERMISSION FROM A.E. ROGERS ARCHITECTS, LLC.

0 4' 8' 16' 24'
1/8"= 1'–0"

A.E. Rogers
ARCHITECTS, LLC
P.O. Box 34401 • Juneau, Alaska 99803
Tele 907.789.7589 Fax 907.789.1638

STATE OF ALASKA 49th Alan E. Rogers No. A–5582 REGISTERED PROFESSIONAL ARCHITECT

Fire Marshal Review No.
2007J–0045

CONSTRUCTION DOCUMENTS

Golden North Annex
2nd Floor Apartments Addition

Broadway & 3rd Avenue
Skagway, Alaska 99840

Number	Date	By	Description of Revisions
REV. 8–8–08 – NE BEDROOM TO OFFICE			

Sheet Title
SITE PLAN
CODE REVIEW
SPECIFICATIONS
GENERAL NOTES

Scale AS SHOWN (HALF SCALE AT 11X17)
Designed AER Drawn AER
Date NOV 28, 2006 Checked AER
Approved By AER Job Number 0611

Sheet Number
A1 OF 3

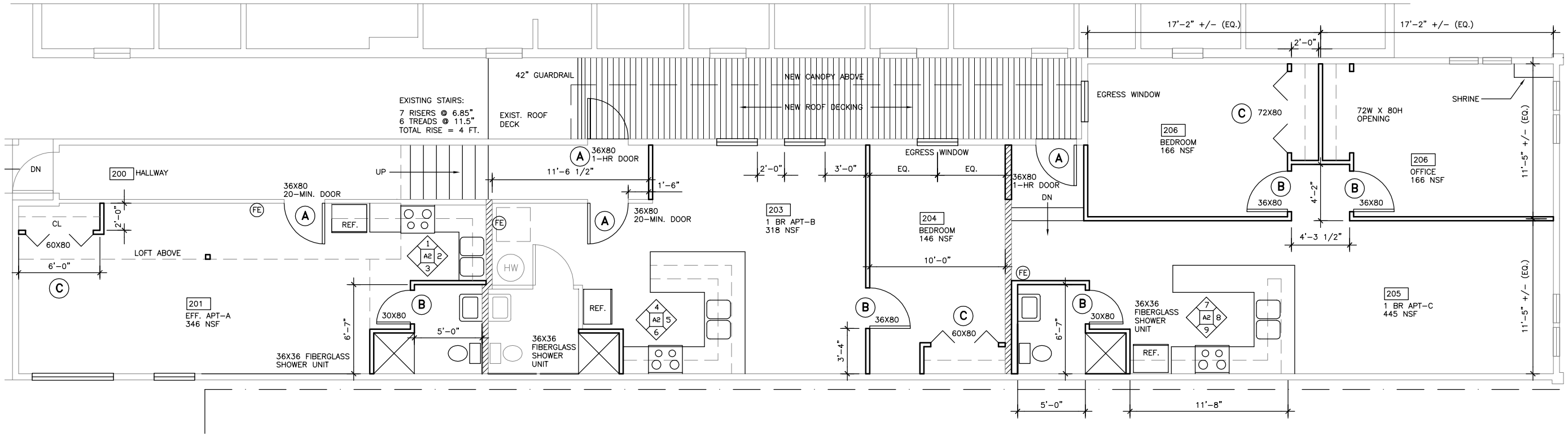

A 2ND FLOOR PLAN

SCALE: 1/4" = 1'-0" D:\CAD\0611

NEW WORK
1-HOUR FIRE RATED WALL
EXISTING TO REMAIN
(FE) NEW FIRE EXTINGUISHER (SEE SPECS.)

Door Types

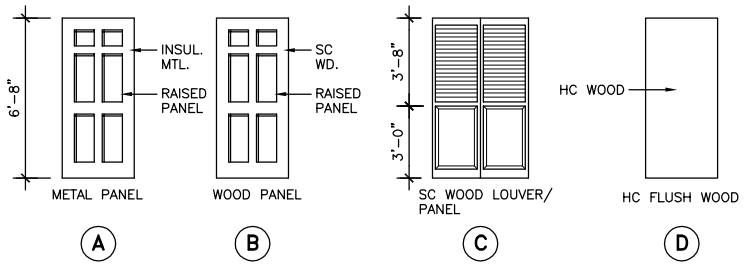

Window Types

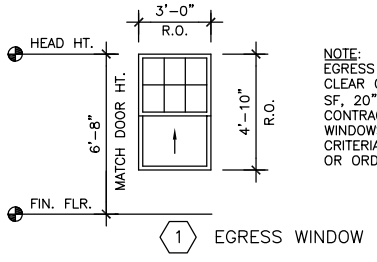

NOTE:
EGRESS WINDOWS; MIN. NET CLEAR OPENING SIZE = 5.7 SF, 20" W., 24" H. CONTRACTOR TO VERIFY WINDOWS MEET THIS CRITERIA BEFORE FRAMING OR ORDERING WINDOWS.

Canopy Specifications

CANOPY MUST MEET 2003 IBC, SEC. 3105 & 2003 IFC, CHAPTER 24

CANOPY MUST MEET LATERAL & STRUCT. LOADS PER IBC CHAPTER 16

STRUCT. MEMBERS MUST BE PROTECTED TO PREVENT DETERIORATION PER IBC SEC. 3105.3

CANOPY FRAMES SHALL BE OF NON-COMBUSTIBLE MATERIAL, FIRE-RETARDANT-TREATED WOOD, OR WOOD OF TYPE IV SIZE (SEC. 3105.3)

CANOPY MATERIAL SHALL BE FLAME RESISTANT IN ACCORDANCE WITH NFPA 701 OR HAS A FLAME SPREAD INDEX NOT GREATER THAN 25 (ASTM E 84).

EXTEND EXISTING SPRINKLER LINES & HEADS UNDER CANOPY AREAS TO MEET CODE.

201 Eff. Apt. A – Kitchen

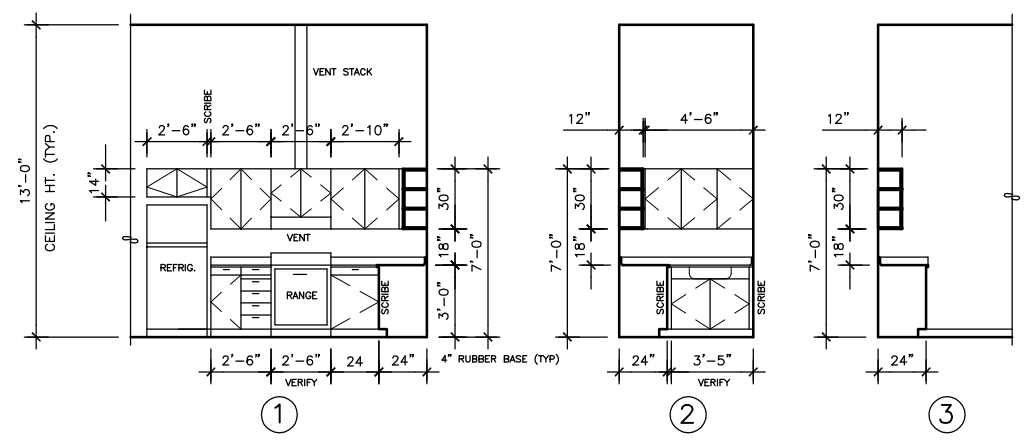

203 1BR Apt. B – Kitchen

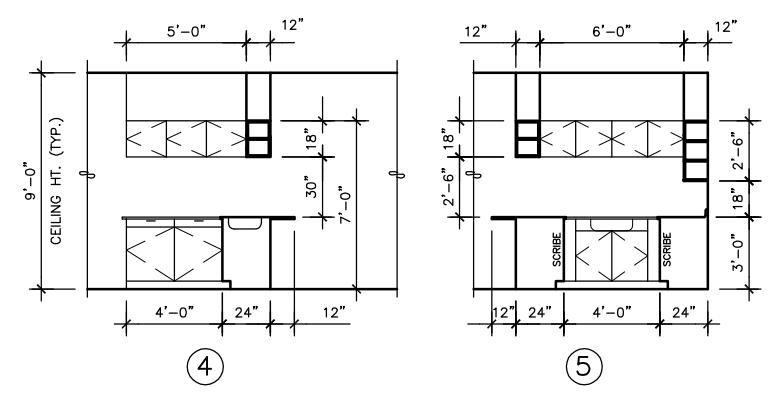

203 – Kitchen

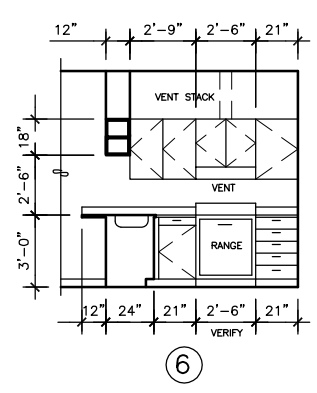

205 1BR Apt. C – Kitchen

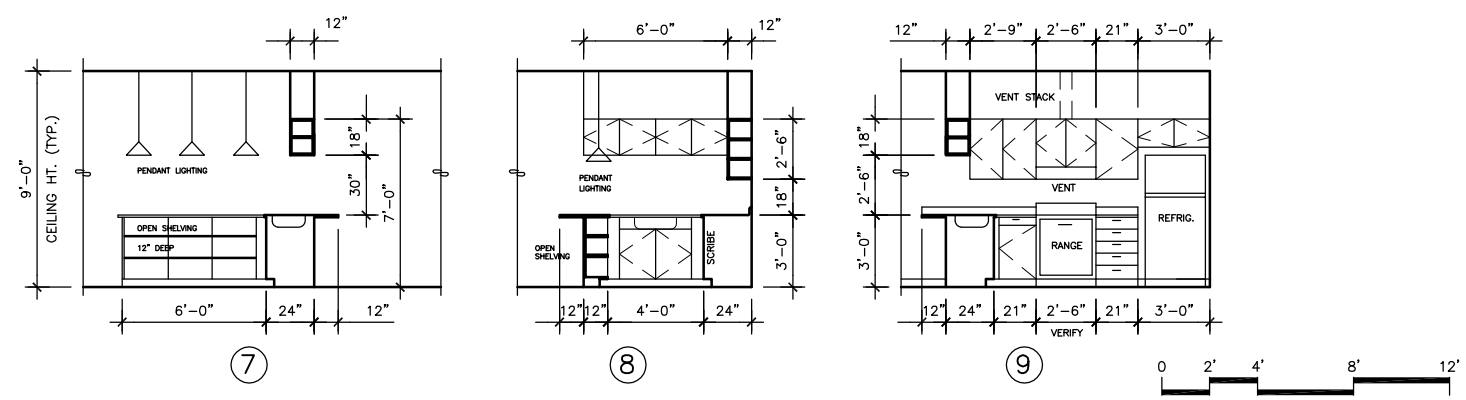

A.E. Rogers
ARCHITECTS, LLC
P.O. Box 34401 • Juneau, Alaska 99803
Tele 907.789.7589 Fax 907.789.1638

STATE OF ALASKA 49th Alan E. Rogers No. A-5582 REGISTERED PROFESSIONAL ARCHITECT

Fire Marshal Review No. 2007J-0045

CONSTRUCTION DOCUMENTS

Golden North Annex 2nd Floor Apartments Addition

Broadway & 3rd Avenue
Skagway, Alaska 99840

Number	Date	By	Description of Revisions
REV. 8	8-08	–	NE BEDROOM TO OFFICE

Sheet Title
2ND FLOOR PLAN
DOOR TYPES
WINDOW TYPES
INTERIOR ELEVATIONS

Scale AS SHOWN (HALF SCALE AT 11X17)
Designed AER Drawn AER
Date NOV 22, 2006 Checked AER
Approved By AER Job Number 0611

Sheet Number
A2 OF 3

A.E. Rogers
ARCHITECTS, LLC
P.O. Box 34401 • Juneau, Alaska 99803
Tele 907.789.7589 Fax 907.789.1638

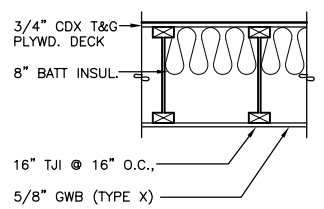

1 HR. FIRE SEPARATION: SIM. TO FC-5420 PER FIRE MARSHAL MTG. 11-9-06

D EXIST. FLR./CLG.
SCALE: 3/4" = 1'-0" D:\CAD\0611

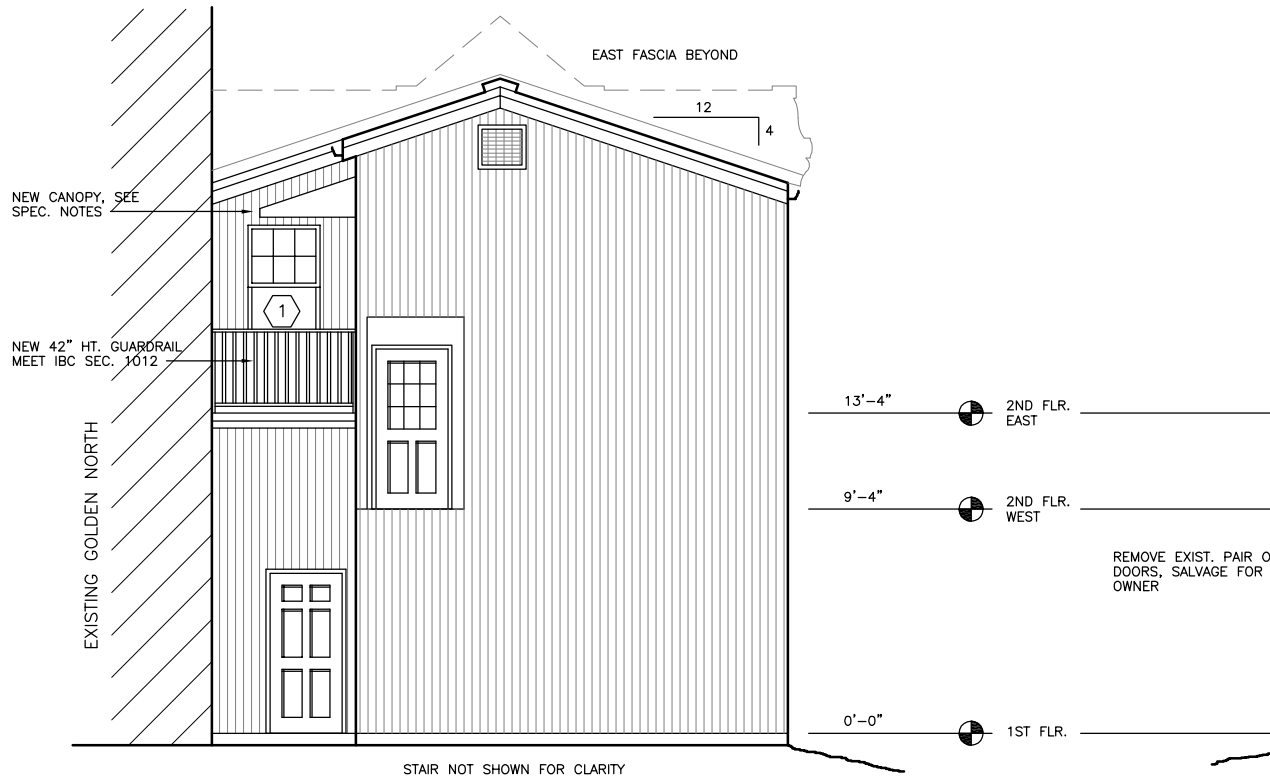

A WEST ELEVATION
SCALE: 1/4" = 1'-0" D:\CAD\0611

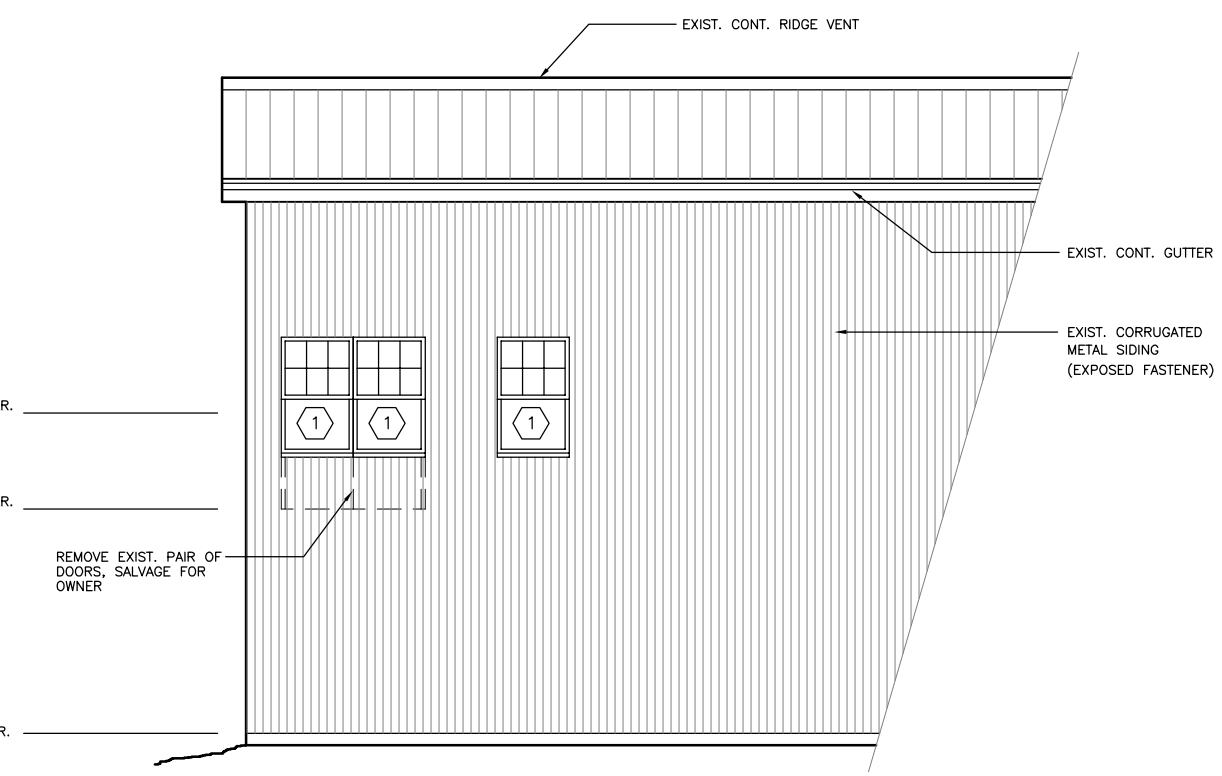

B SOUTH ELEVATION
SCALE: 1/4" = 1'-0" D:\CAD\0611

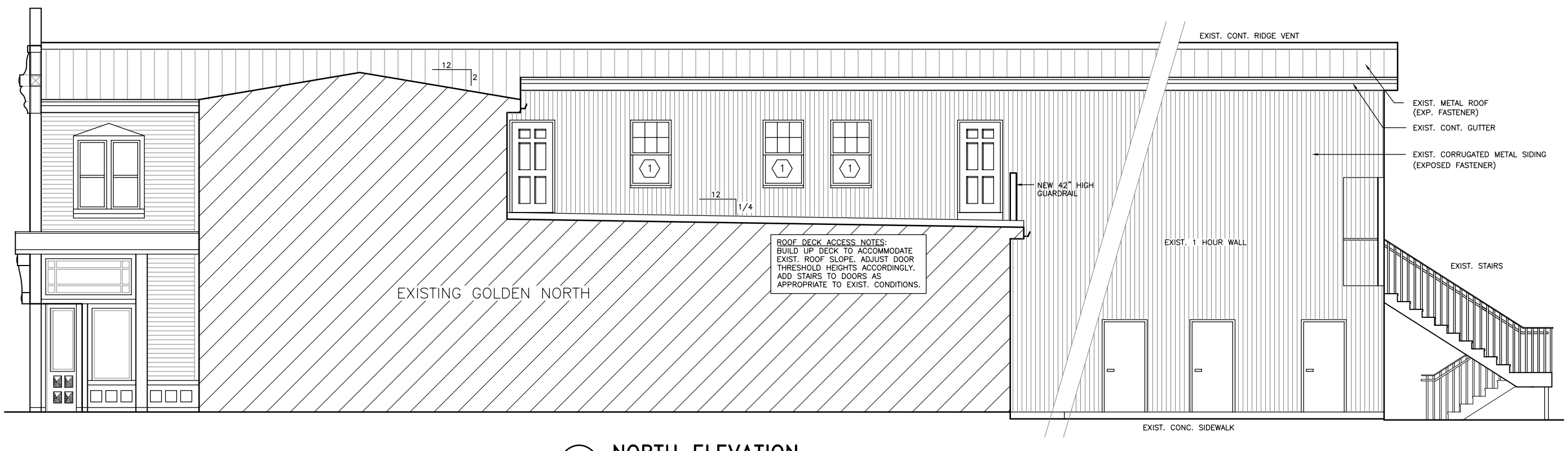

C NORTH ELEVATION
SCALE: 1/4" = 1'-0" D:\CAD\0611

0 4' 8' 16' 24'
1/8"= 1'-0"

STATE OF ALASKA 49th Alan E. Rogers No. A-5582 REGISTERED PROFESSIONAL ARCHITECT

Fire Marshal Review No. 2007J-0045

CONSTRUCTION DOCUMENTS

Golden North Annex
2nd Floor Apartments Addition

Broadway & 3rd Avenue
Skagway, Alaska 99840

Number	Date	By	Description of Revisions
REV.	8-8-08	–	NE BEDROOM TO OFFICE

Sheet Title
EXTERIOR ELEVATIONS
FLR./CLG. DETAIL

Scale AS SHOWN (HALF SCALE AT 11X17)
Designed AER Drawn AER
Date NOV 22, 2006 Checked AER
Approved By AER Job Number 0611

Sheet Number
A3 OF 3